PART C – LONG ANSWER

10. To the nearest *hundredth* of a meter, what is the length of line segment SP?

2 decimal places.

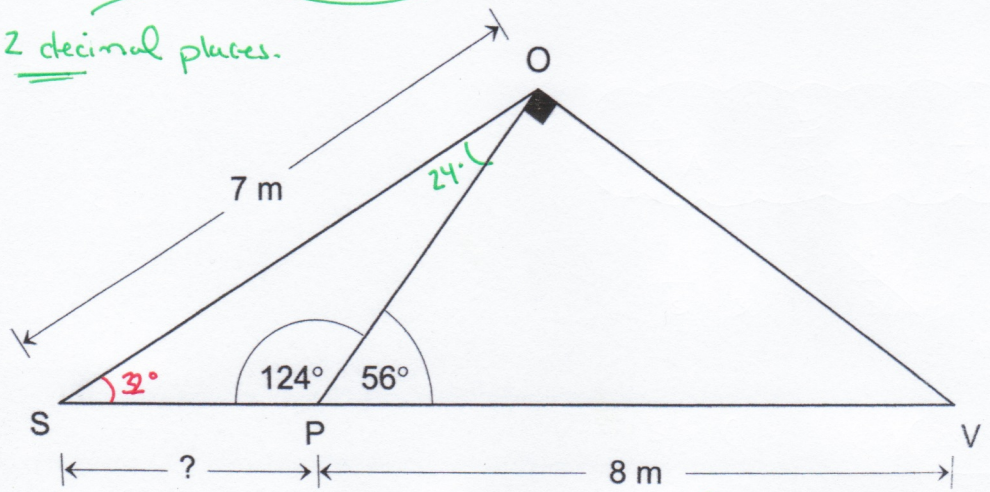

(1)

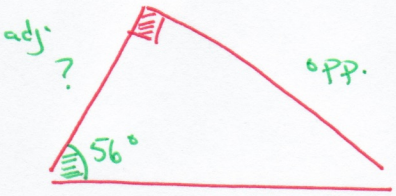

8
hypotenuse

SOH-CAH-TOA.

Have: hyp.
Want: adj.

$$\frac{\cos\angle}{1} = \frac{\text{adj.}}{\text{hyp}}$$

$$\frac{\cos 56}{1} = \frac{x}{8}$$

$$x = \frac{(8)(\cos 56)}{1}$$

$$x = 4.47354$$

(2)

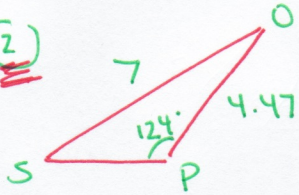

$$\frac{O}{\sin O} = \frac{P}{\sin P} = \frac{S}{\sin S}$$

$$\frac{\cancel{O}}{\sin O} = \frac{7}{\sin 124} = \frac{4.47}{\sin S}$$

$$\sin S = \frac{(4.47)(\sin 124)}{7}$$

$$\cancel{\sin^{-1}}\cancel{\sin} S = \sin^{-1} 0.52982$$

$$S = 31.993°$$

$$S = 32°$$

(3) $\angle O = 180 - 124 - 32°$

$$\angle O = 24°$$

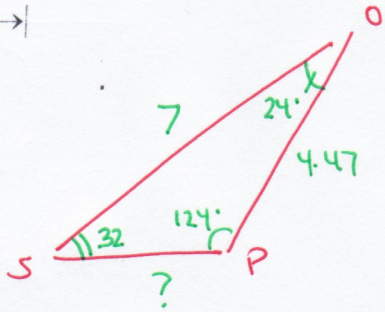

(4)

$$\frac{O}{\sin O} = \frac{P}{\sin P} = \frac{S}{\sin S}$$

$$\frac{?}{\sin 24} = \frac{7}{\sin 124} = X$$

$$? = \frac{(7)\sin 24}{\sin 124}$$

$$? = 3.43$$

ANSWER.

11. In the Cartesian plane below:

div. pt.

(1) • point R is located $\frac{3}{8}$ of the way from P to Q

(2) • $\overline{PQ}$ is parallel to $\overline{ST}$ — same slope.

• the equation for line $\overline{PQ}$ is $y = -\frac{1}{4}x + 60$ — slope.

(3) • point S is on the y-axis (x=0)

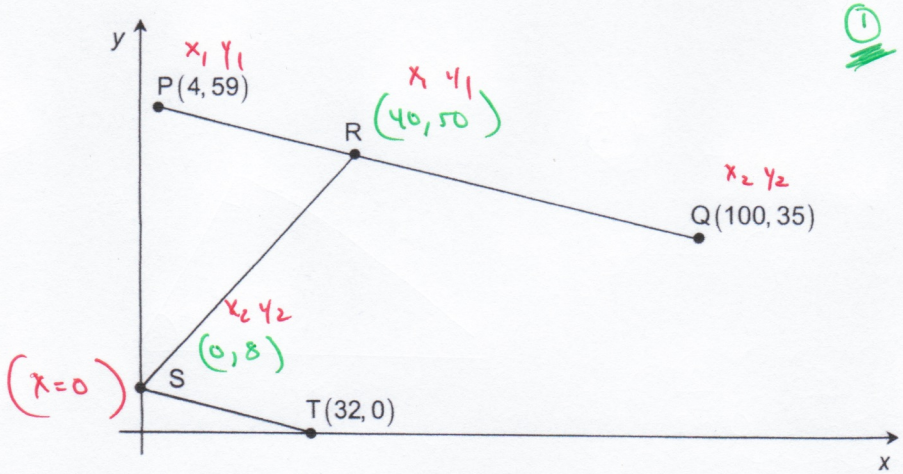

(1) $R\left(x_1 + \frac{a}{b}(x_2 - x_1),\ y_1 + \frac{a}{b}(y_2 - y_1)\right)$

$= 4 + \frac{3}{8}(100-4),\ 59 + \frac{3}{8}(35-59)$

$= 4 + \frac{3}{8}(96),\ 59 + \frac{3}{8}(-24)$

$4 + 36,\ 59 - 9$

$R\ (40, 50)$

(2) Equation ST

// same slope

$a = -\frac{1}{4}$ or -0.25

$y = a \cdot x + b$

$y = -0.25x + b$

$0 = -0.25(32) + b$

$0 = -8 + b$

$+8 \quad +8$

$8 = b$

$y = -0.25x + 8$

(4) What is the distance from point S to point R?

(3) Point S (x=0)

$y = -0.25x + 8$

$y = -0.25(0) + 8$

$y = 8$

$S\ (0, 8)$

(4) Distance $= \sqrt{(x_2 - x_1)^2 + (y_2 - y_1)^2}$

$= \sqrt{(0-40)^2 + (8-50)^2}$

$= \sqrt{(-40)^2 + (-42)^2}$

$= \sqrt{1600 + 1764}$

$= \sqrt{3364}$

ANSWER:

Distance $= 58$

12. What is the measure of *x* to the nearest tenth of a metre?

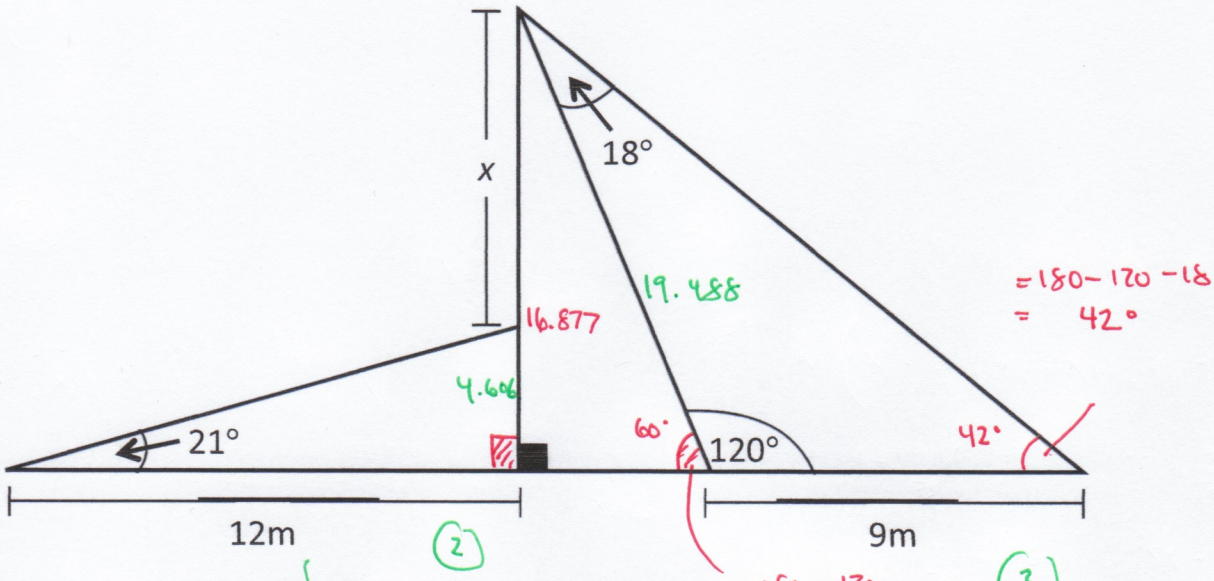

(1)

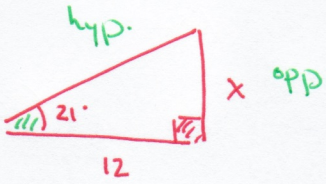

SOH-CAH-TOA.

Have : adj.
Want : opp.

$$\frac{\tan \angle}{1} = \frac{\text{opp.}}{\text{adj.}}$$

$$\frac{\tan 21}{1} = \frac{x}{12}$$

$$x = \frac{(12)(\tan 21)}{1}$$

$$x = 4.606$$

(2)

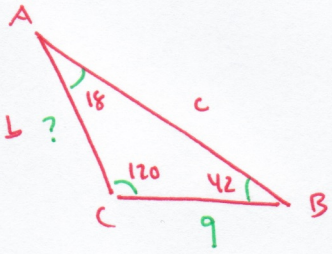

$$\frac{a}{\sin A} = \frac{b}{\sin B} = \frac{c}{\sin C}$$

$$\frac{9}{\sin 18} = \frac{?}{\sin 42} = \cancel{\frac{c}{\sin 120}}$$

$$? = \frac{(9)(\sin 42)}{\sin 18}$$

$$? = 19.488$$

(3)

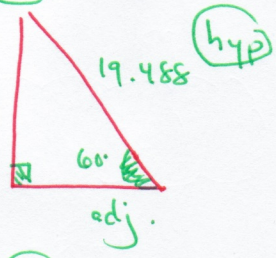

SOH-CAH-TOA.

Have: hyp.
Want: opp.

$$\frac{\sin \angle}{1} = \frac{\text{opp}}{\text{hyp}}$$

$$\frac{\sin 60}{1} = \frac{?}{19.488}$$

$$? = \frac{(19.488)(\sin 60)}{1}$$

$$? = 16.877$$

(4)

$$x = 16.877 - 4.606$$

$$x = 12.271$$

$$x \approx 12.3$$

13. On Monday, Michael stops at the school cafeteria to buy 3 hot dogs and 4 hamburgers for $26.25
Tuesday, he buys 5 hot dogs and 3 hamburgers for a total of $27.25

How much will it cost Michael on Friday, when he buys 7 hot dogs and 5 hamburgers?

$7x + 5y = ?$

$x =$ \$ hot dog

$y =$ \$ hamburger.

$$3x + 4y = 26.25$$
$$-3x \qquad -3x$$
$$\frac{4y}{4} = \frac{-3x + 26.25}{4}$$
$$y = -0.75x + 6.5625$$

$$5x + 3y = 27.25$$
$$-5x \qquad -5x$$
$$\frac{3y}{3} = \frac{-5x + 27.25}{3}$$
$$y = -1.\overline{6}x + 9.08\overline{3}$$

$$-0.75x + 6.5625 = -1.\overline{6}x + 9.08\overline{3}$$
$$+1.\overline{6}x \qquad +1.\overline{6}x$$
$$0.91\overline{6}x + 6.5625 = 9.08\overline{3}$$
$$-6.5625 \qquad -6.5625$$
$$\frac{0.91\overline{6}x}{0.91\overline{6}} = \frac{2.5208\overline{3}}{0.91\overline{6}}$$
$$\boxed{x = 2.75}$$

$$y = -1.\overline{6}(2.75) + 9.08\overline{3}$$
$$\boxed{y = 4.5}$$

$$7x + 5y = ?$$
$$7(2.75) + 5(4.5) = ?$$
$$19.25 + 22.5 = ?$$
$$41.75 = ?$$

ANSWER.

Part A

	A	B	C	D
1.	☐	☐	☐	☑
2.	☐	☐	☐	☑
3.	☐	☑	☐	☐
4.	☐	☐	☑	☐
5.	☐	☑	☐	☐
6.	☐	☐	☐	☑

Part B

7. The x-intercept is (__-8.4__, __0__)

   The y-intercept is (__0__, __21__)

8. The area is __200.1__ m^2

9. Angle C measures __126.9°__ degrees